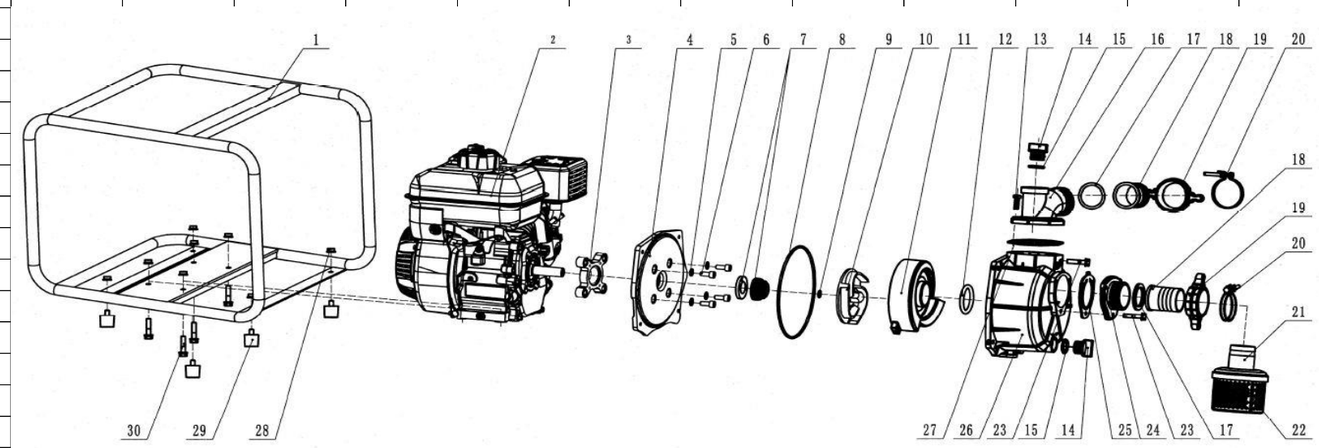PRONTO	PART NUMBER	USE	DESCRIPTION	804451											
804623	BIA-WP30ABS-1	USE BIA-WP20ABS-1	FRAME												
	BIA-WP30ABS-2	USE BIA-WP20ABS-2	ENGINE												
804641	BIA-WP30ABS-3	USE BIA-WP20ABS-3	CONNECTOR												
806146	BIA-WP30ABS-4		PUMP BODY												
804644	BIA-WP30ABS-5	USE BIA-WP20ABS-5	WASHER												
804645	BIA-WP30ABS-6	USE BIA-WP20ABS-6	SOCKET SCREW												
804800	BIA-WP30ABS-7	USE BIA-WP20ABS-7	MECHANICAL SEAL												
804662	BIA-WP30ABS-8		O RING 215X4.5												
804647	BIA-WP30ABS-9	USE BIA-WP20ABS-9	WASHER												
804648	BIA-WP30ABS-10		IMPELLER												
804649	BIA-WP30ABS-11		DIFFUSER												
804650	BIA-WP30ABS-12		SEAL RING												
804627	BIA-WP30ABS-13	USE BIA-WP20ABS-13	HEX BOLT M8X25												
804628	BIA-WP30ABS-14	USE BIA-WP20ABS-14	PLUG												
804629	BIA-WP30ABS-15	USE BIA-WP20ABS-15	O RING 25X4.2												
804651	BIA-WP30ABS-16		OUTLET												
804652	BIA-WP30ABS-17		GASKET												
804653	BIA-WP30ABS-18		PIPE												
804654	BIA-WP30ABS-19		SPANNER												
804655	BIA-WP30ABS-20		CLAMP												
804656	BIA-WP30ABS-21		STRAINER												
804657	BIA-WP30ABS-22		STRAINER FITTING												
804588	BIA-WP30ABS-23	USE BIA-WP10-30	HEX BOLT M8X20												
804658	BIA-WP30ABS-24		INLET												
804659	BIA-WP30ABS-25		NON RETURN VALVE												
804660	BIA-WP30ABS-26		PUMP BODY												
804661	BIA-WP30ABS-27		GASKET												
804601	BIA-WP30ABS-28	USE BIA-WP15A-1	HEX NUT M8												
804594	BIA-WP30ABS-29	USE BIA-WP10-36	RUBBER FEET												
804642	BIA-WP30ABS-30	USE BIA-WP20ABS-30	HEX BOLT M8X35